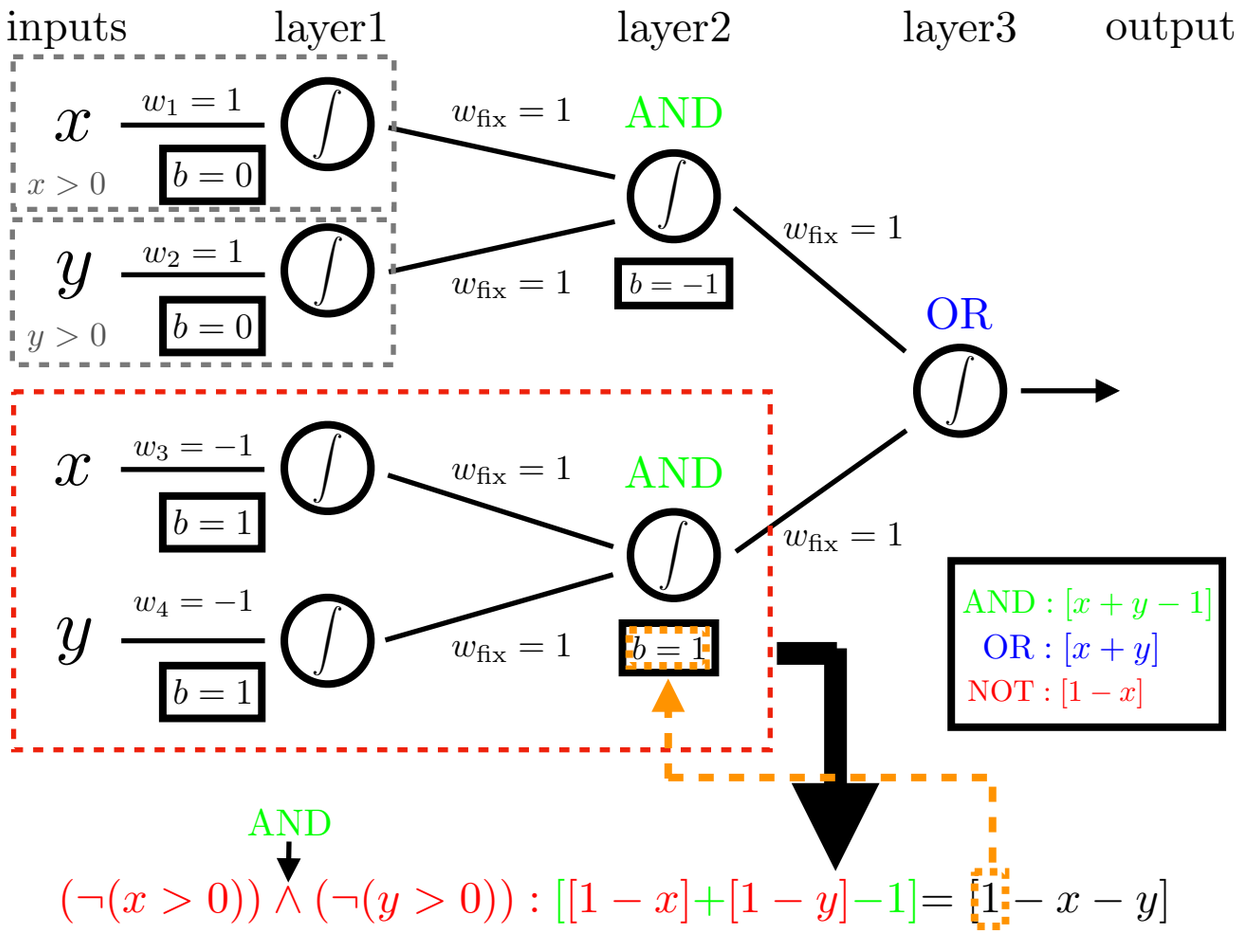
inputs
layer1
layer2
layer3
output
x
$w_1 = 1$
$b = 0$
$x > 0$
y
$w_2 = 1$
$b = 0$
$y > 0$
$w_{\text{fix}} = 1$
AND
$b = -1$
$w_{\text{fix}} = 1$
$w_{\text{fix}} = 1$
OR
x
$w_3 = -1$
$b = 1$
$w_{\text{fix}} = 1$
AND
$w_{\text{fix}} = 1$
y
$w_4 = -1$
$b = 1$
$w_{\text{fix}} = 1$
$b = 1$
AND : $[x + y - 1]$
OR : $[x + y]$
NOT : $[1 - x]$
AND
$(\neg(x > 0)) \wedge (\neg(y > 0)) : [[1 - x] + [1 - y] - 1] = [1 - x - y]$

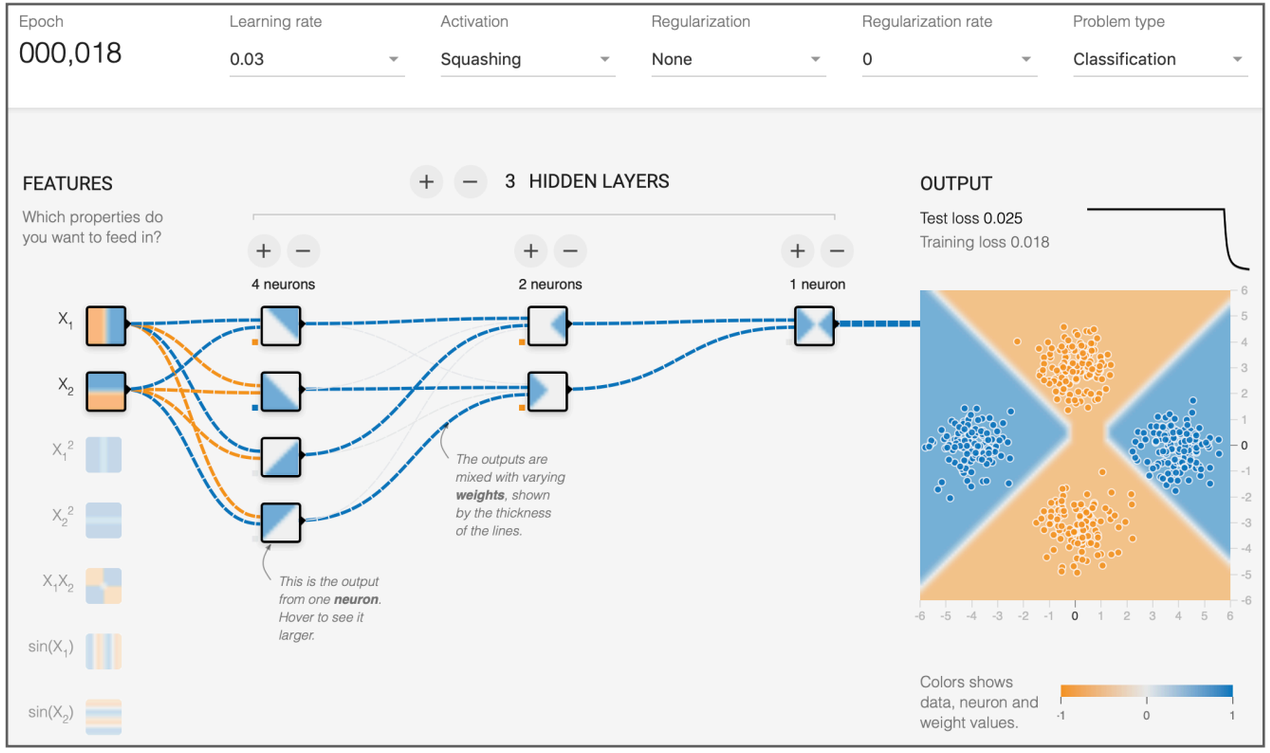
Epoch
000,018
Learning rate
0.03
Activation
Squashing
Regularization
None
Regularization rate
0
Problem type
Classification
FEATURES
Which properties do you want to feed in?
3 HIDDEN LAYERS
4 neurons
2 neurons
1 neuron
X_1
X_2
X_1^2
X_2^2
X_1X_2
$\sin(X_1)$
$\sin(X_2)$
This is the output from one neuron. Hover to see it larger.
The outputs are mixed with varying weights, shown by the thickness of the lines.
OUTPUT
Test loss 0.025
Training loss 0.018
Colors shows data, neuron and weight values.